

Green Power Analytics

Daniel Scharfen, Vice President Green Power Analytics

PCIM Europe 2023

restricted

We enable industrial customers to add value in their digital transformation for sustainability.

We are excited to have substantially expanded the scope and depth of our offering with the help of our latest acquisition …



Headquarter

Berlin, Germany

Acquired in 2022

By Infineon Technologies (100%)

Experts in engineering & data science

With extensive industry experience

Operations of AI Services

In oil & gas, chemicals, utilities

End-user customers:

PCK DOMO BORSIG DB

VATTENFALL covestro Stadtwerke Cottbus KuchenMeister Norddeutsche Kaffeewerke Strauss

INDUSTRIAL ANALYTICS



How will Infineon deploy Industrial Analytics capabilities to address OEM challenges?

Data Collection …

Our **Edge Analytics** service combines data pre-processing at the equipment level with advanced analysis of relevant sensor data which is then transmitted on for interpretation

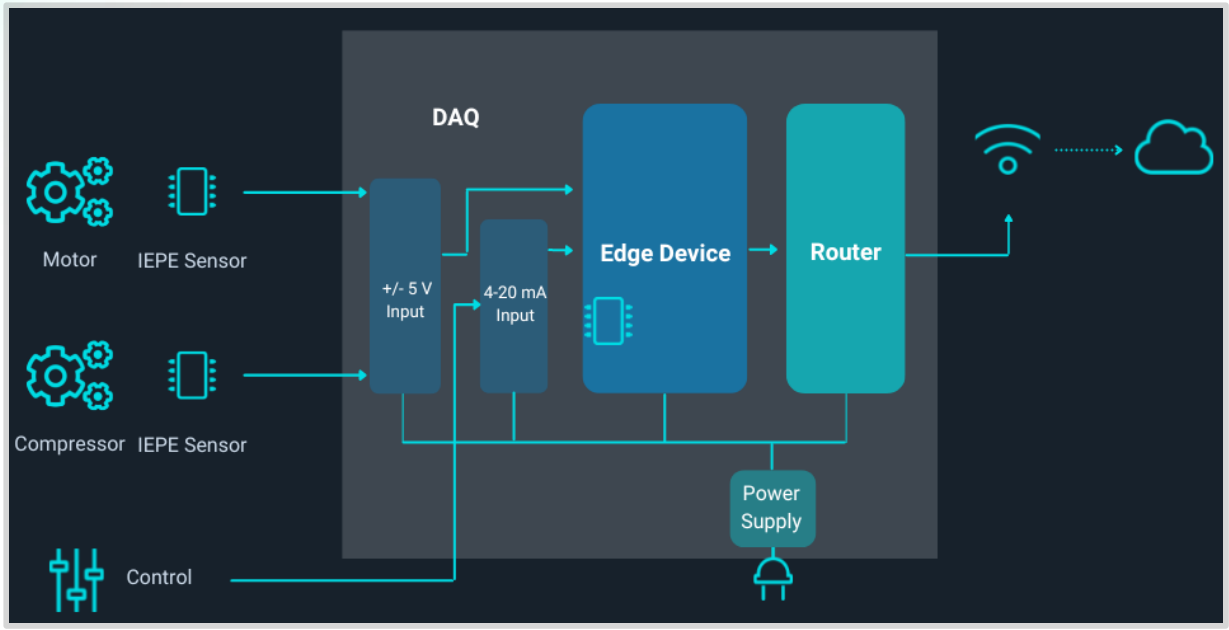

INDUSTRIAL ANALYTICS

Data Interpretation …

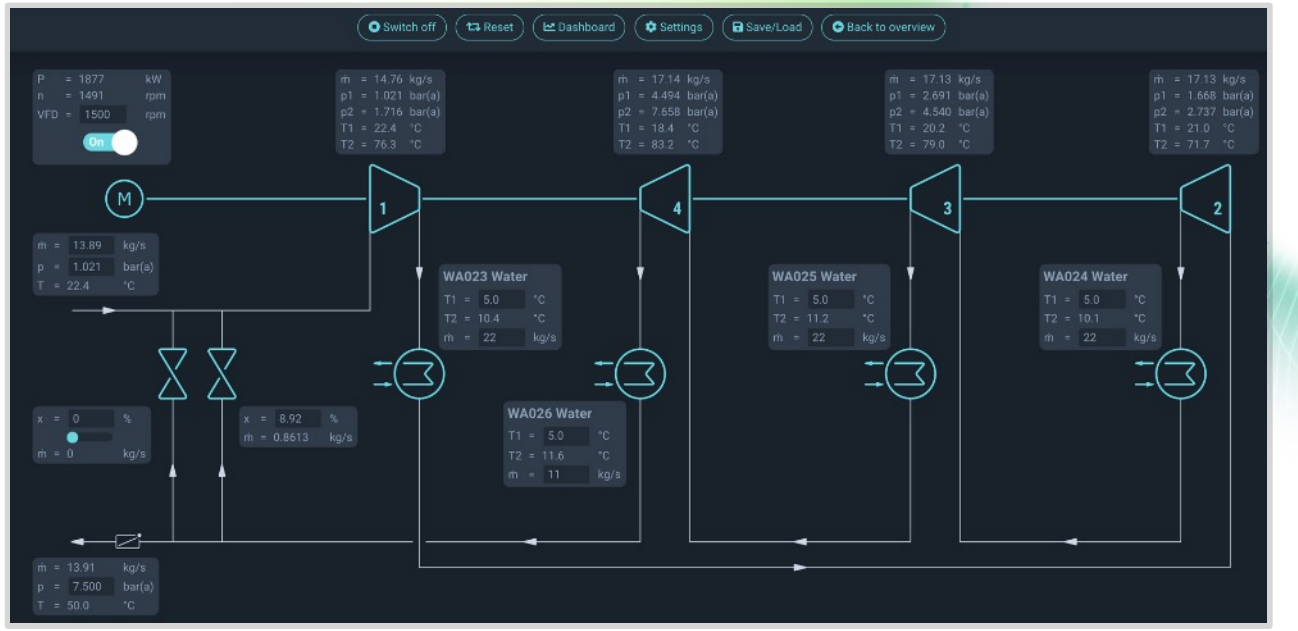

… is achieved using our unique **Physics-Based Hybrid Models** to derive accurate digital twins representing dynamic equipment behavior and interactions, trained on historical as well as real-time data

INDUSTRIAL ANALYTICS

Value …

… is established using an AI-based services for functionality such as: **condition monitoring, prescriptive maintenance, performance optimization, energy management, event management**



INDUSTRIAL ANALYTICS

Value propositions for end-user …

Increasing Efficiency
… by effective equipment management for energy consumption reduction

Optimizing Equipment Health
… with real-time data insights to improve processes & extend maintenance cycles

Improving Workforce Performance
… by helping them to better understand events & with prescriptive guidance

Boosting Productivity
… with improved insights into equipment operation

INDUSTRIAL ANALYTICS



Why is this better than other solutions in the market?

Go beyond conventional Machine Learning to achieve optimal results

Conventional Machine Learning models are based on statistical probability algorithms that can identify patterns in large quantities of data

Our AI solution uses **Physics-based models**, to achieve deep insight into the underlying mechanisms down to an individual component level

INDUSTRIAL ANALYTICS



How will this be implemented?

Integrate the benefits of a field-proven solution into your service platform



INDUSTRIAL ANALYTICS

Accurate

Hybrid models based on first principles offer inherently better accuracy over standard statistical or heuristic systems

Insightful

By using physics-based models, our solution can comprehend the underlying root causes of malfunctions and prescribe effective maintenance measures.

Scalable

Our solution supports flexible deployment in cloud, edge or hybrid using standard communication protocols, reduced training data and flexible models

30 %

Reduction of false positives compared to other models

25 %

Reduction of warranty costs by generating fewer claims

50 +

Types of assets running with our analytics services

Unprecedented insights into semiconductor operations such as in Infineon's IGBT modules …

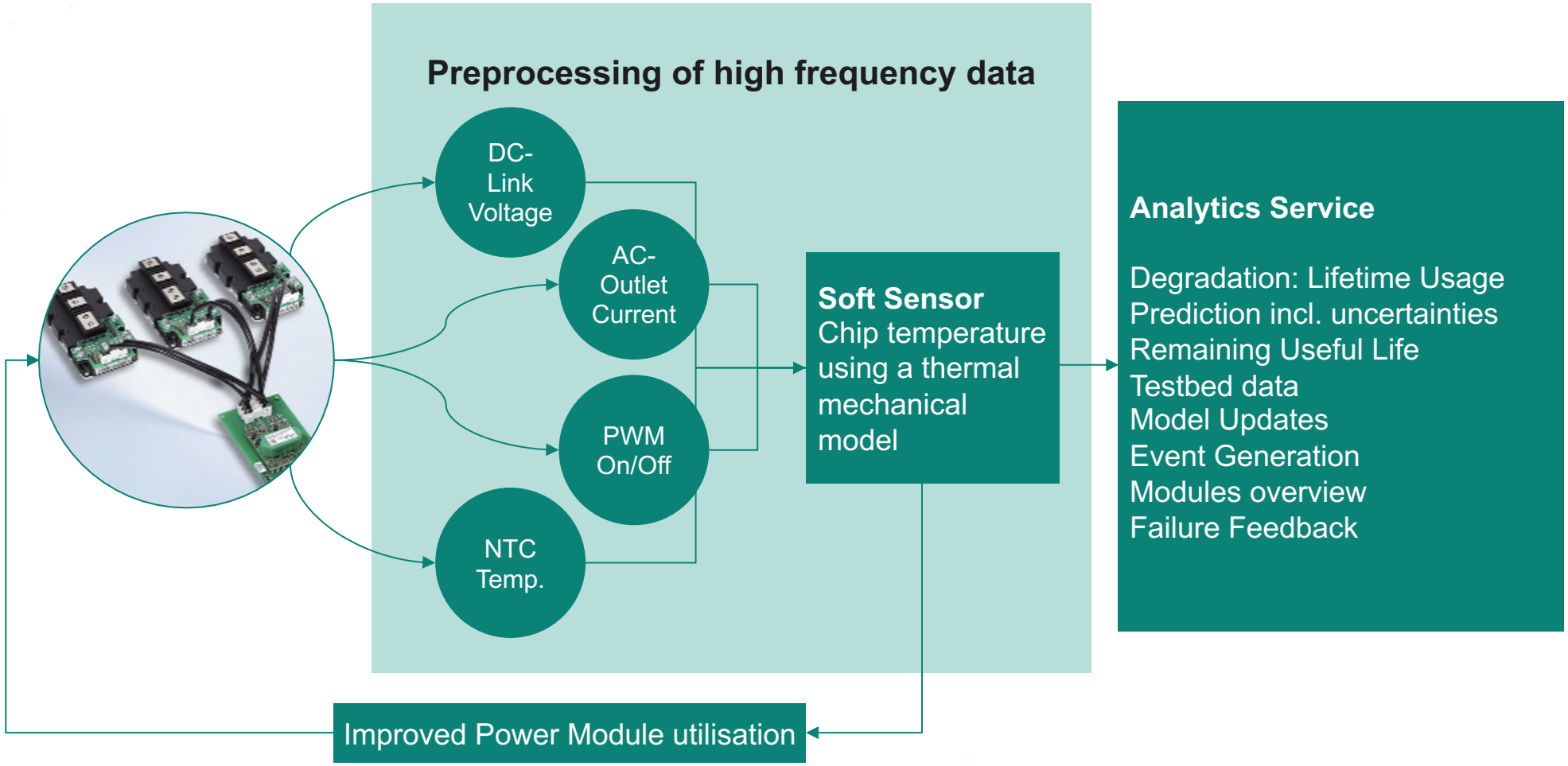

INDUSTRIAL ANALYTICS


Infineon